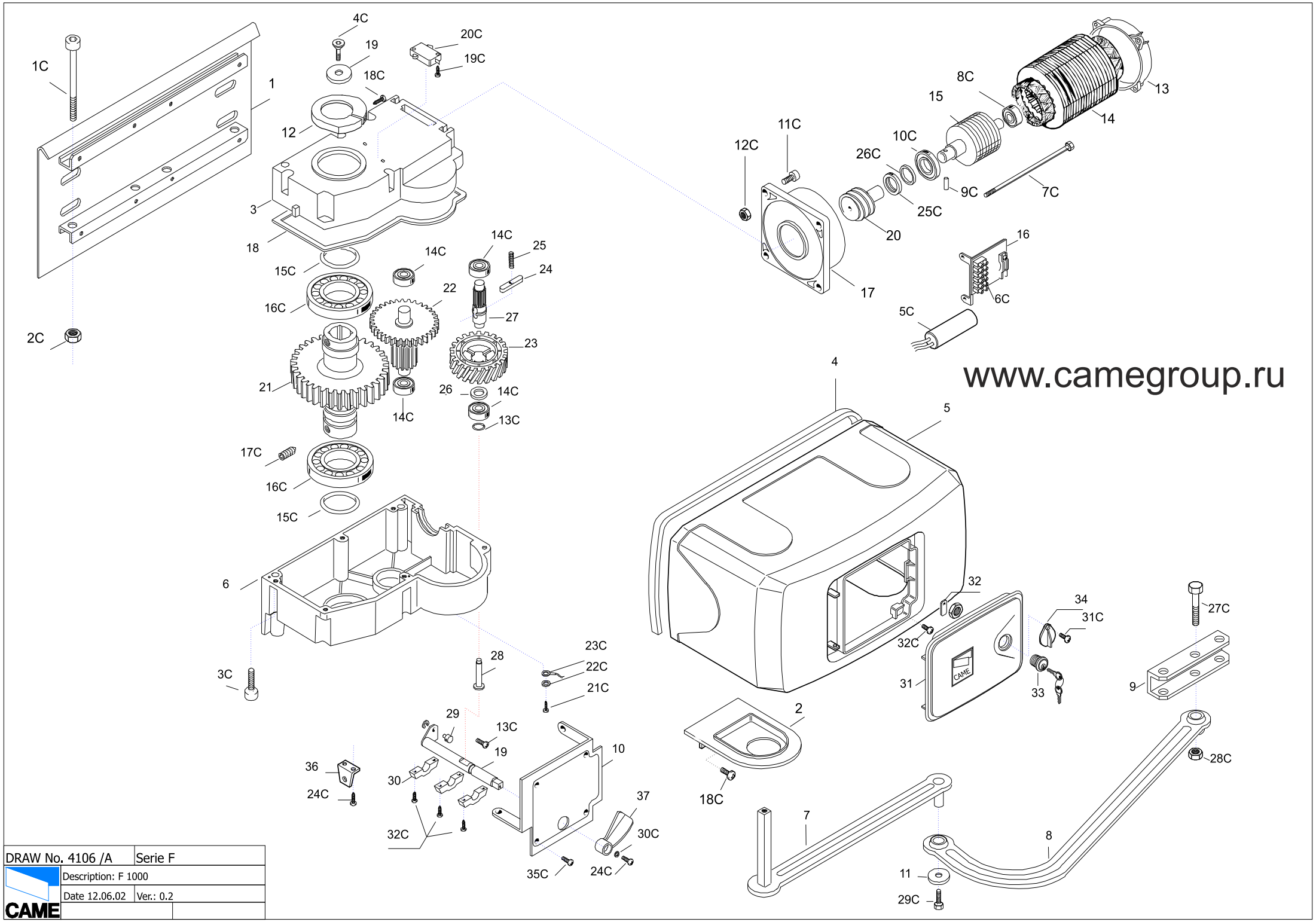

DRAW No. 4106 /A	Serie F
Description: F 1000	
Date 12.06.02	Ver.: 0.2

CAME